48"

RIPLEY COLLECTION

FRONT VIEW

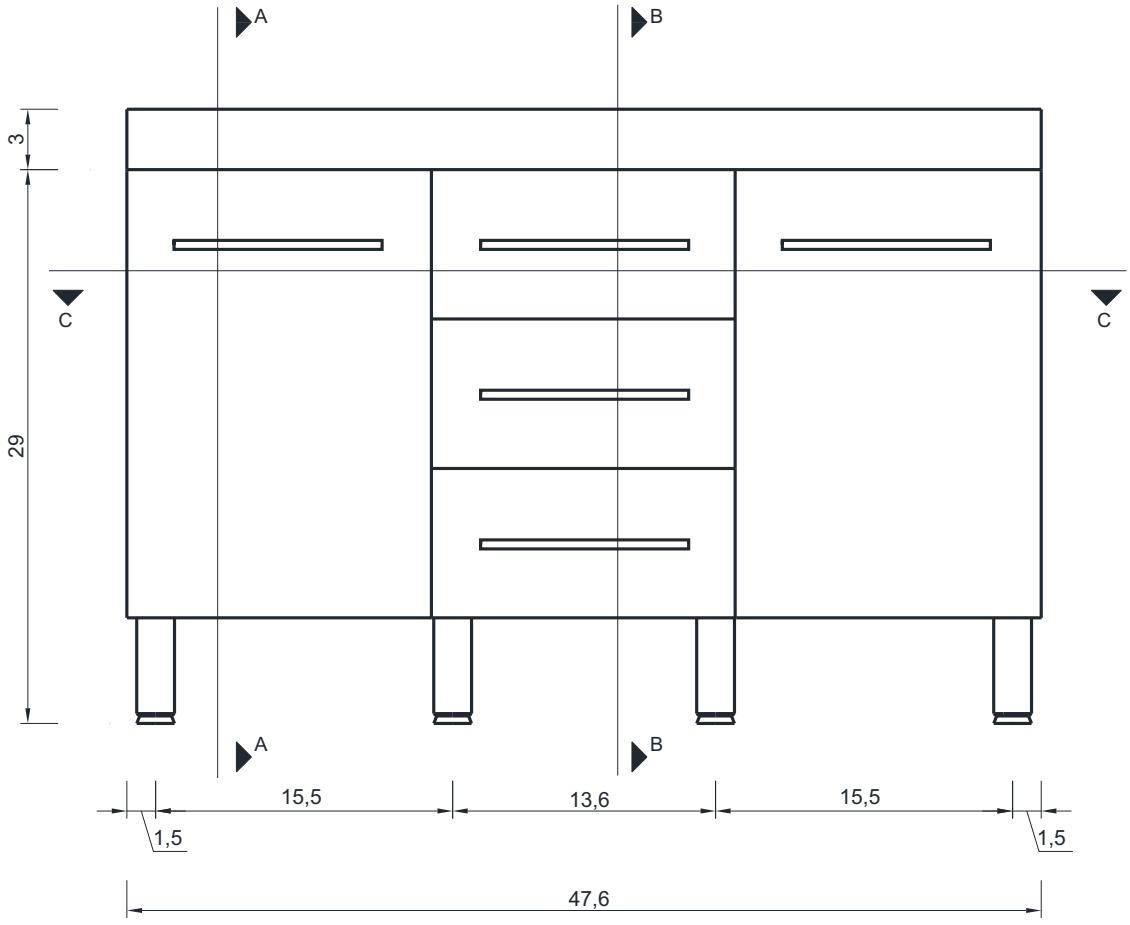

Vanity Only

AT-8048

ALYA Bath

48"

RIPLEY COLLECTION

SIDE VIEW

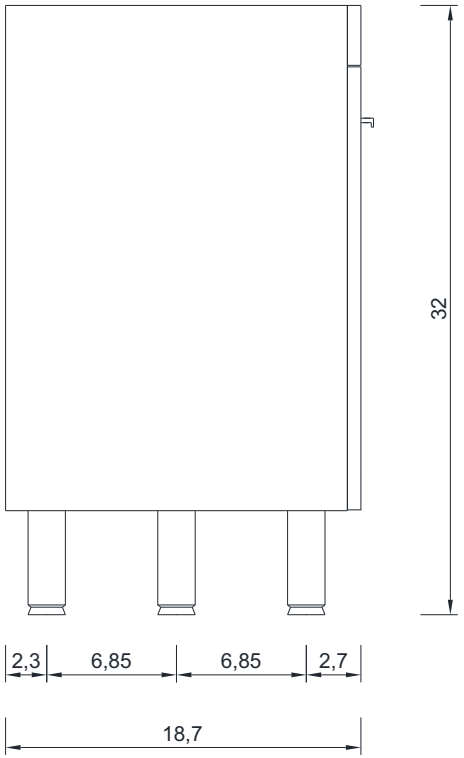

A - A SECTION

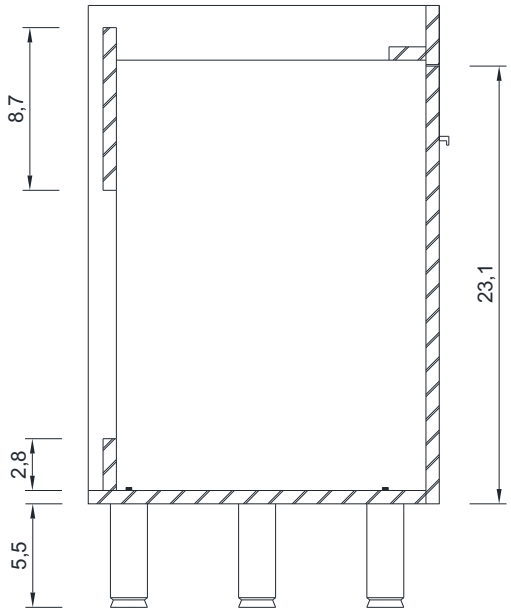

B - B SECTION

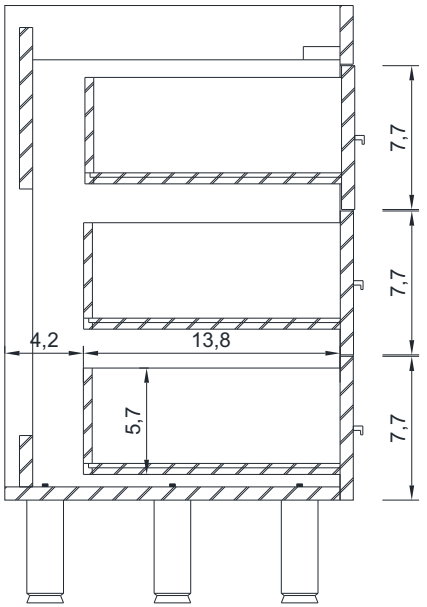

Vanity Only

AT-8048

ALYA Bath

48"

RIPLEY COLLECTION

C - C SECTION

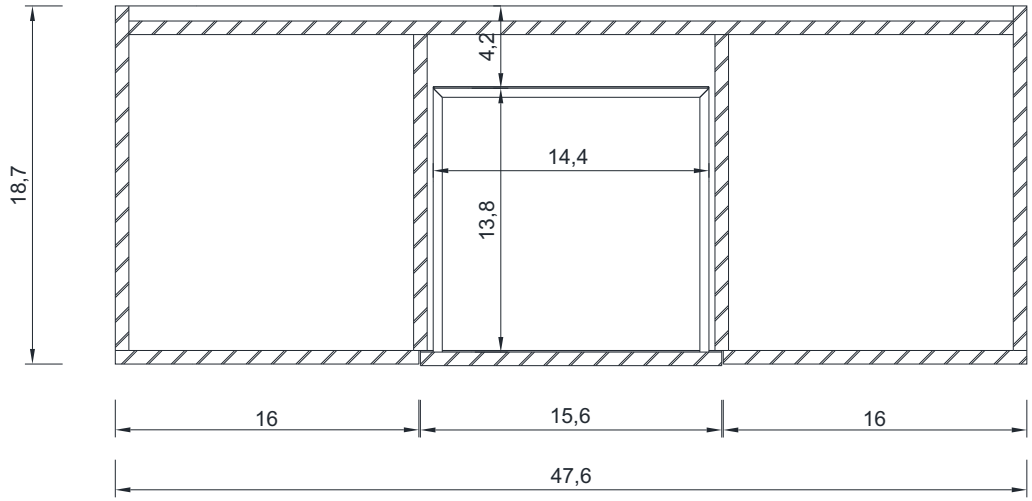

Vanity Only

AT-8048

ALYA Bath

48"

RIPLEY COLLECTION

FRONT VIEW

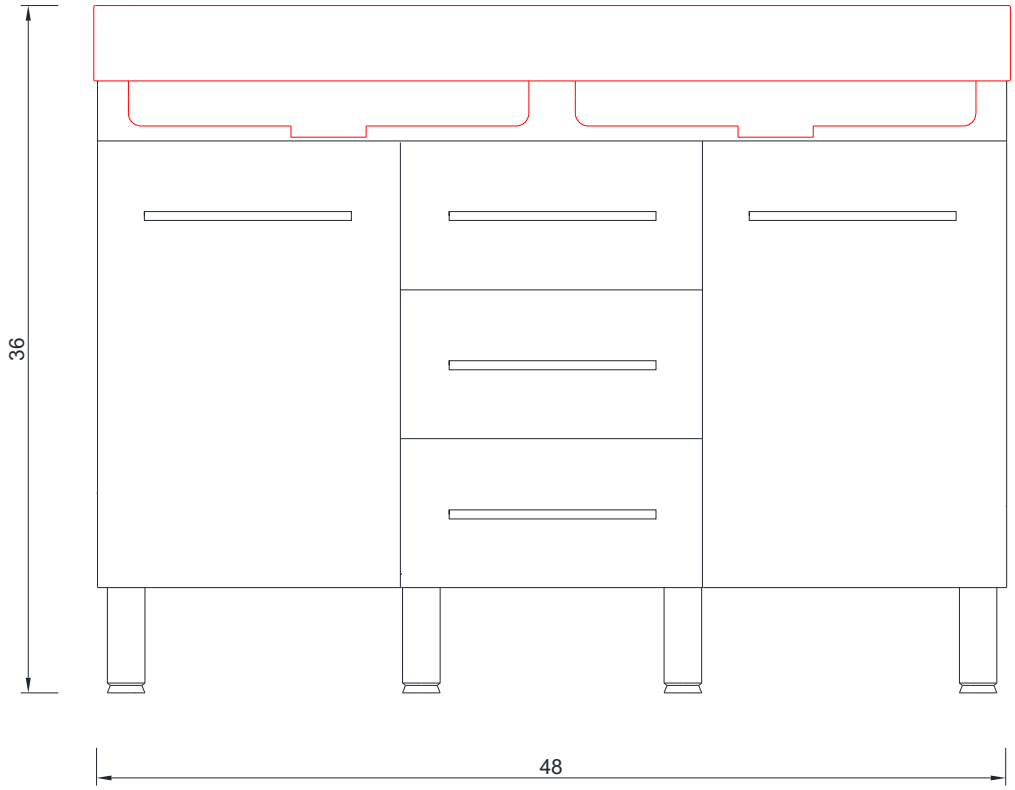

Vanity With Top

AT-8048-D

ALYA Bath

48"

RIPLEY COLLECTION

SIDE VIEW

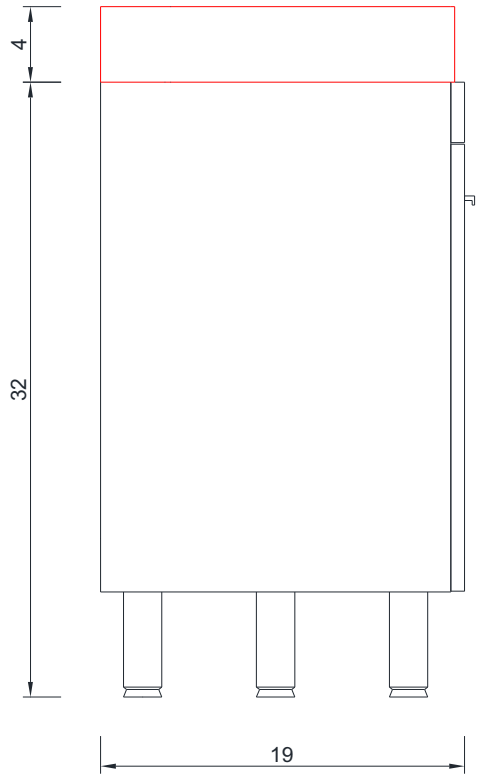

Vanity With Top

AT-8048-D

ALYA Bath

48"

RIPLEY COLLECTION

TOP VIEW

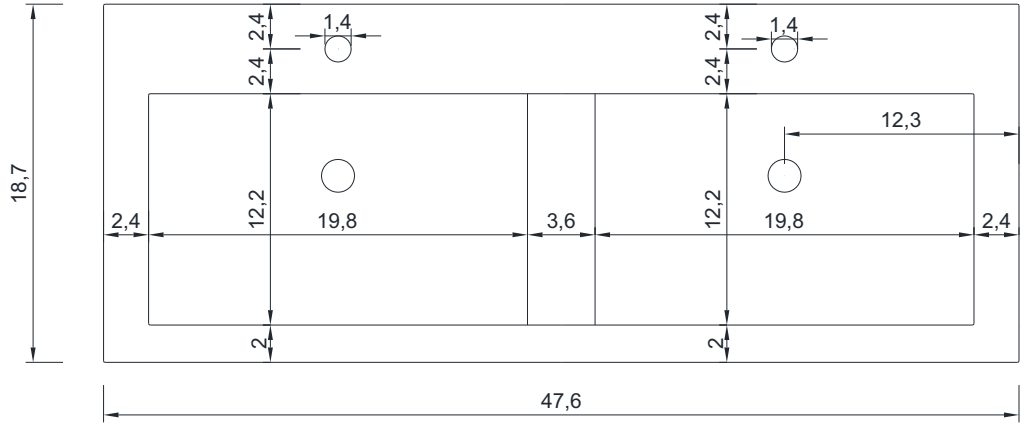

Vanity With Top

AT-8048-D

ALYA Bath