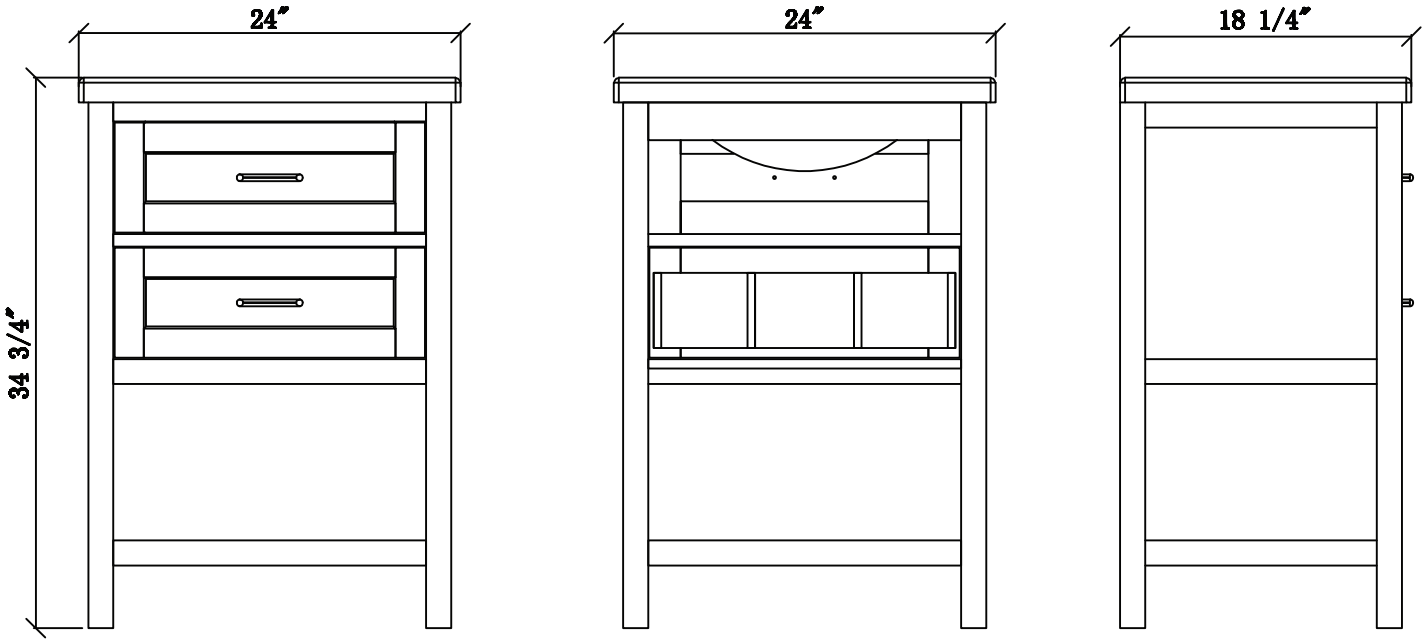

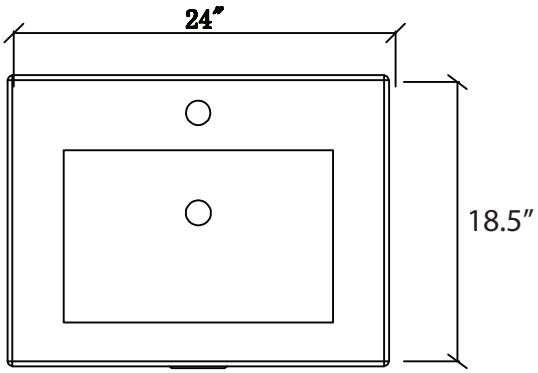

ALYA
Bath

All dimensions and specifications are approximate and subject to change without notice.